Height 96* / 134** / 181*** mm

Drawer PLATINIUM-18 4D Slim PUSH

Attention! * Dimensions for 96 mm drawer / ** Dimensions for 134 mm drawer / * Dimensions for 181 mm**

SEVROLL

Components

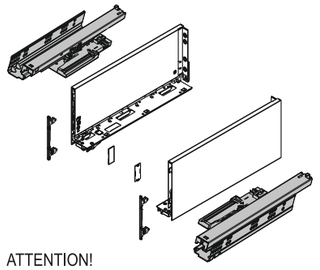

ATTENTION!
screws are **not** included

Cutting dimensions of **18 mm** MDF

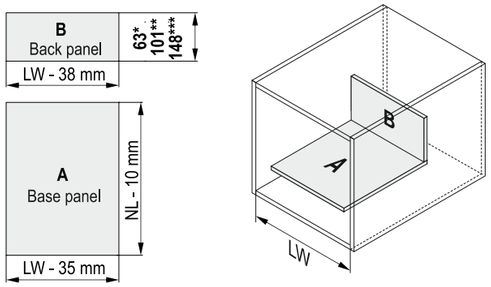

NL : 250 [mm]
270
300
350
400
450
500
550
600

A – Base panel
B – Back panel

LW – internal cabin width
NL – nominal length of drawer

Drawer assembly

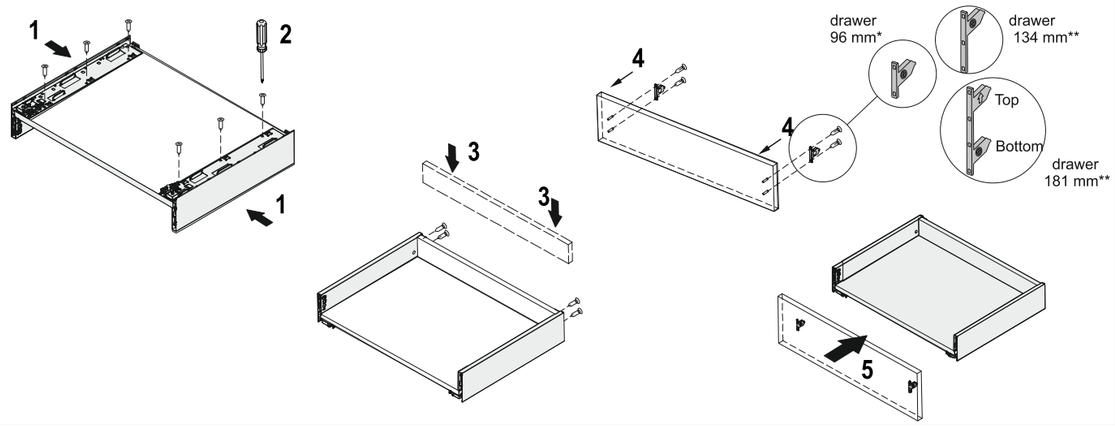

Drawer runner positioning

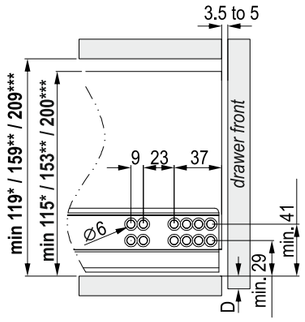

D - Positioning of drawer front

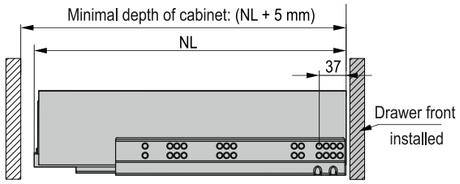

**Warning:
in drawers with recessed fronts, the guides should be positioned further back by the thickness of the drawer front!**

Installation measurement

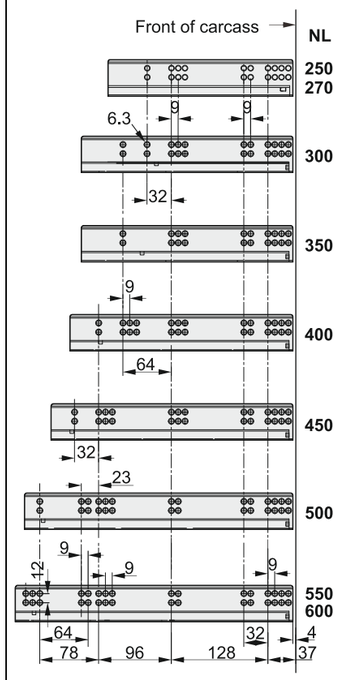

Drawer front regulation

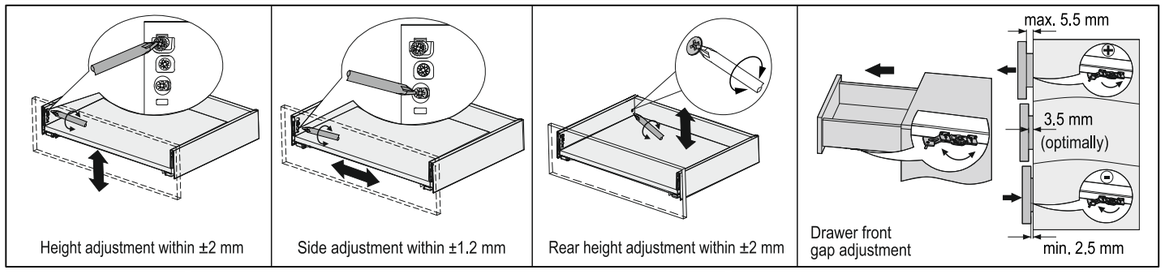

Height adjustment within ±2 mm

Side adjustment within ±1.2 mm

Rear height adjustment within ±2 mm

Drawer front
gap adjustment

Mounting dimensions of back panel

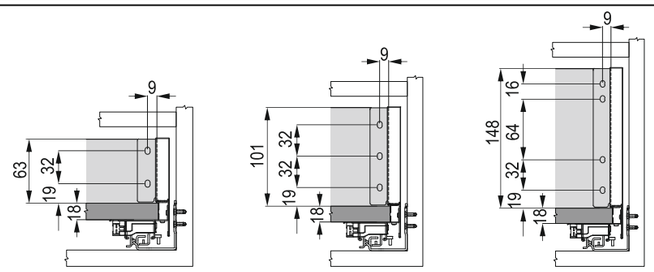

*drawer 96 mm**

*drawer 134 mm***

*drawer 181 mm****

Cover insertion / removal

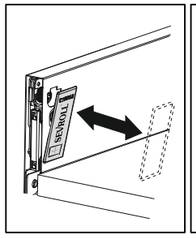

Drawer front panel removal

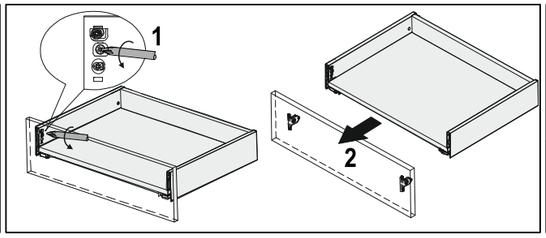

Installation of synchronizing bar Platinum 4D

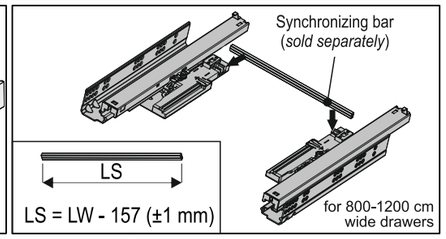

Mounting dimensions for drawer front panel

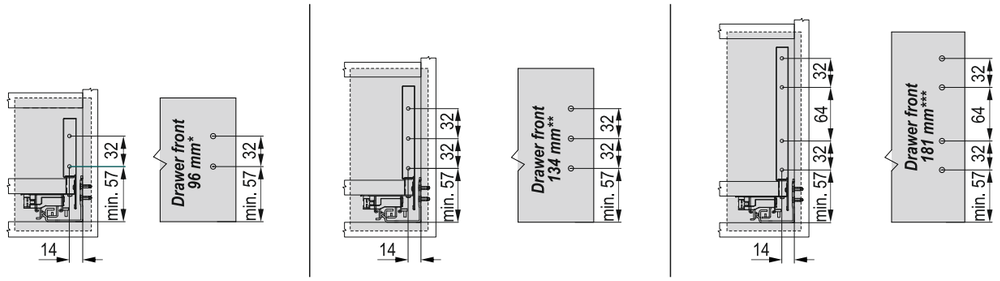

Drawer removal

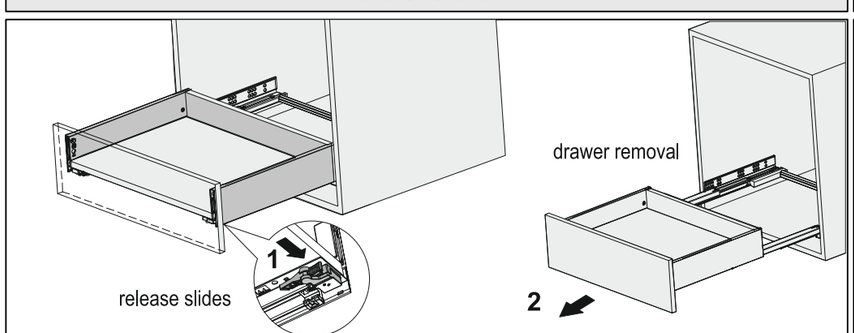

Drawer strengthening

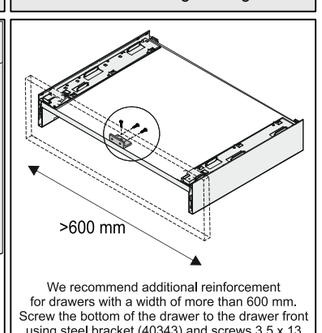

We recommend additional reinforcement for drawers with a width of more than 600 mm. Screw the bottom of the drawer to the drawer front using steel bracket (40343) and screws 3.5 x 13